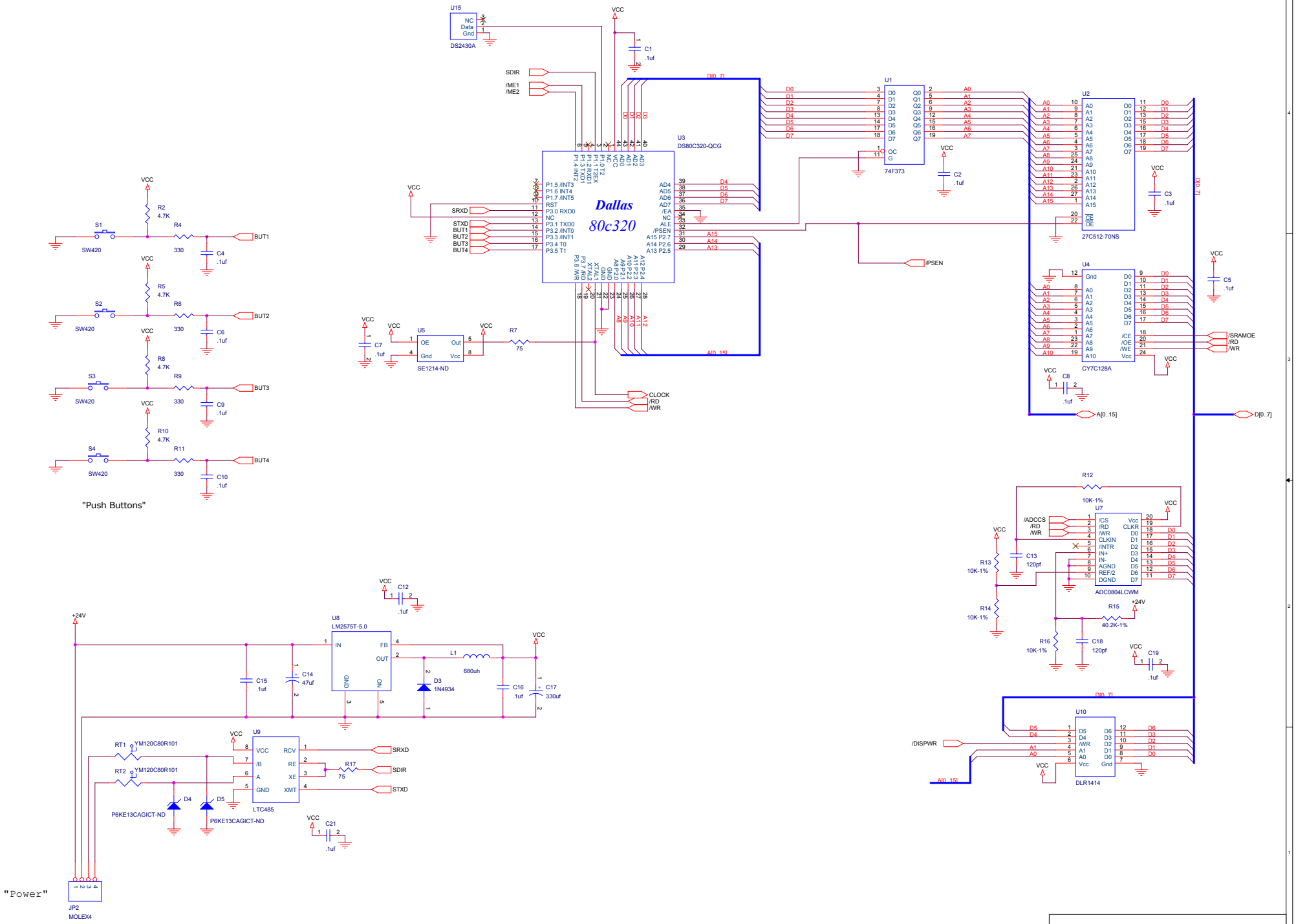

Title	CXI Color Fusion		
Size C	Document Number 456-02-003		Rev H
Date: Thursday, June 12, 2003	Sheet 1 of 2		

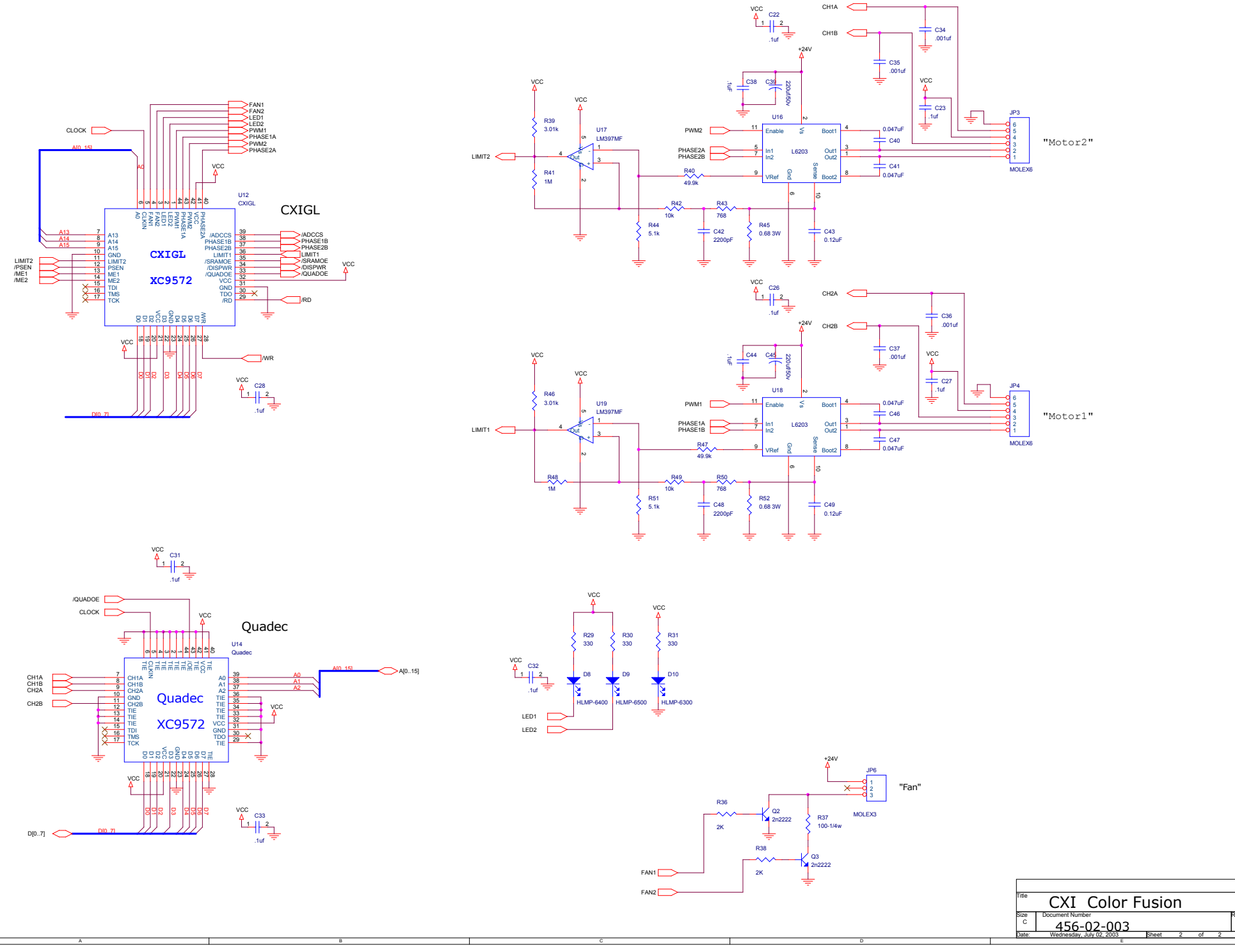

Title	CXI Color Fusion	
Size C	Document Number 456-02-003	Rev H
Date: Wednesday, July 02, 2003	Sheet 2 of 2	